压缩机纳入仕样书
COMPRESSOR SPECIFICATION

1、压缩机型号及图样 Model Name & Drawings

型 号	Model Name:	C-SBS235H38B
压缩机规格书	Compressor Specification:	C-SBS235H38B-00-GGS-0
通用附属书	Common Appendix	TYFSS-001E
安全要望书	Safety Request	AQYWS-001E

2、法规满足 Conformity of laws and regulations

取得认证 Certificates obtained	TUV, CE, UKCA, cULus
该机型允许销售地：	欧洲，英国，美国，加拿大

若需销往其他国家或地区需取得我司许可。

Permitted Sales Regions:	EU, UK, USA, Canada

for other countries and regions, need to be approved by our company in advance.

3、压缩机及标准附件一览 List of Compressor & Accessory Parts

	名称 Name	部品编号 Part No.	数量 Qty	备注 Remarks
	压缩机 Compressor	C-SBS235H38B	1	已注油 Oil in
部品 PARTS	接线盒盖 Terminal Box Cover	A-0101-DSB	1	安装在压缩机上 Installed on Compressor
	卡子 Terminal Box Clip	A-0201-DSB	1	安装在压缩机上 Installed on Compressor
	盲孔塞 Eyelet Rub Lead Wire	A-0301-DSB	1	安装在压缩机上 Installed on Compressor
	减震橡胶垫 Mounting Grommet	M-0101-DSB	4	
	套管 Mounting Sleeve	M-0201-DSB	4	
	接地螺钉 Screw Special	B-0101-DSB	2	安装在压缩机上 Installed on Compressor

4、参考图面 Reference Drawings

关联图面 Reference Drawings:	D-0105-DSB、M-5101-DSB、D-0202-DSB、E-0914-DSS

客户 USER:			制造 MANUFACTURER:		
Area Cooling Solutions, SAU			冰山松洋压缩机（大连）有限公司 Sonyo Compressor (Dalian) Co., Ltd.		
APPROVED 承认	PURCHASING MANAGER 审核	TECHNICAL MANAGER 审查	LEADER 批准	CHECKED 校阅	SUBMITTED 作成
			2023.12.20	2023.12.18 / 2023.12.14	2023.12.14

此纳入仕样书一式两份，一份由客户保存，一份返回我司进行存档。
This specification is made out in two originals, please return one original with your approval signature.

No. : C-SBS235H38B-00-GGS-0

APPROVAL SHEET

SPECIFICATIONS OF HERMETIC SCROLL COMPRESSOR

MODEL	C-SBS235H38B

NO.	DATE	PAGE	REVISION DETAILS
△			
△			
△			
△			
△			

REVISION RECORD

Sonyo Compressor (Dalian) Co., Ltd.

Section 1. General Specifications

Content		Unit	Specification
Compressor Model (Code)		—	C-SBS235H38B
Type		—	Hermetic Scroll Compressor
Application		—	High Back Pressure
Compressor Cooling Type		—	Natural Cooling
Power Source	Phase	—	3
	Rated Voltage	V	380 ~ 415/440 ~ 460
	Rated Frequency	Hz	50/60
Voltage Range		V	342 ~ 456/396 ~ 506
Weight (Including Oil)		kg	37.8
Refrigerant		—	R407C
Oil Type		—	FV68S
Oil Charge		ml	1700
Displacement		cm^3 /rev	110.2
Maximum Continuous Current (MCC)		A	17.5
Motor	Motor Type	—	3-PH Induction Motor
	Number of Poles	—	2
	Electrical Insulation	Class	E
	Locked Rotor Ampere	A	78/80
	Winding Resistance [at 25°C (77°F）]	Ω	U-V 2.037
			U-W 2.037
			V-W 1.928
Connection Tube	Suction Line (O.D.)	mm (in)	22.2 (0.875)
	Discharge Line (O.D.)	mm (in)	12.7 (0.500)
Compressor Surface Paint		—	Black Paint

Notes

（※1）All units with parentheses are reference values.

Expiration of Specification

Expiration of this specification shall be effected until issuing a notice with indication of the expiration date from the issued date . In case of improvement or elimination of this specification , it shall be handled by the revision record based on agreement between both sides.

Section 2. Performance Warranty

2.1 Performance

Power Source (3PH)	Hz	50	60	Remark
	V	380	440	
Capacity	W	19,500	23,400	±5%
	(BTU/hr)	66,534	79,841	reference
Input Power	W	6,300	7,550	±5%
Current	A	11.2	11.3	±5%

Standard Rating Conditions (R407C MID POINT)

Refrigerant	-	R407C
Condensing Temp.	°C	54.4
Evaporating Temp.	°C	7.2
Suction Gas Temp.	°C	18.3
Liquid Temp.	°C	43.8
Ambient Temp.	°C	35.0

2.2 Sound Level

Power Source (3PH)	Hz	50	60
	V	380	440
Sound Level	dB(A)	62Max.	66Max.

Notes

1 The operating conditions are the same as 2.1.

2 MIC location is the distance of 1m (3.28feet) from the compressor.

3 Sound Level is an average sound pressure level in four directions.

2.3 Minimum Starting Voltage

Power Source (3PH)	Hz	50	60
Minimum Starting Voltage	V	323	374

Conditions

Compressor Temp.	°C	10~60
Ambient Temp.	°C	10~40
High Pressure	MPa(G)	2
Low Pressure	MPa(G)	0.5(72)

2.4 Others

Content		Unit	Specification
Design Pressure	L.P. S.	MPa(G)	1.6
	H. P. S.	MPa(G)	3.3
Insulation Resistance		MΩ	100 (without refrigerant)
Dielectric Strength (The leakage current is less than 10mA)		V	2000 (1 minute)
Residual Moisture		mg	300

Note:

1. The insulation resistance be measured with a DC500V megohm tester.

Section 3. Standard Accessories

3.1 Accessories List

Parts Name	Qty	Parts code	Revision No.	Note
Terminal Box Cover	1	A-0101-DSB	0	Installed on Compressor
Terminal Box Clip	1	A-0201-DSB	0	Installed on Compressor
Eyelet Rub Lead Wire	1	A-0301-DSB	0	Installed on Compressor
Mounting Grommet	4	M-0101-DSB	0	Included with Compressor
Mounting Sleeve	4	M-0201-DSB	0	Included with Compressor
Screw Special	2	B-0101-DSB	0	Installed on Compressor

3.2 The Drawing for Reference

Parts Name	Parts Code	Revision No.
Compressor Outline Drawing	D-0105-DSB	0
Mounting Parts Listing	M-5101-DSB	0
Packing Dimensions	D-0202-DSB	0
Wiring Diagram	E-0914-DSS	0

3. 3 Inernal Motor Protector (in compressor)

Parts Name	Specification		
Inernal Motor Protector	Model	UP18RA052-550	37HM557-15
	Trip Temprature*1	155± 5°C	155± 5°C
	Reset Temprature*1	70± 10°C	60± 9°C
	Trip Current*2	58A / 3~10s	57A / 3～10s

*1. When the protector is not on current, the ambient temperature of the protector rises to the temperature of protector which is for touching current and off, this is trip temperature. Then, the ambient temperature of the protector goes down the moment it touches current and closes, at this moment, the temperature of the protector is reset temperature.

*2. When the current of compressor is overloaded, under the ambient temperature 25℃, the protector can guarantee the motion in the limited current within the first operating circles 3-10seconds.

Section 4. Compressor Protection

4.1 Protection Required but not Included with compressor

Protection Device	Items	Specifications
Reversal Defensible Relay	Features	To protect the compressor from reverse rotation
	Rated Voltage	AC 380～415/440～460V
Crankcase Heater	Rated Power	35W@240V
Discharge Thermostat	Mounting Position	Located within 100mm(4 in)from the compressor shell
	Trip Temperature	130± 5°C
	Reset Temperature	95± 11°C
High Pressure Switch	Setting	Cut-out seting no higher than 3.2Mpa(G)
Low Pressure Switch	Setting	Cut-out seting no lower than 0.05Mpa(G)

4.2 Position of the Protection and Refrigerant Charging

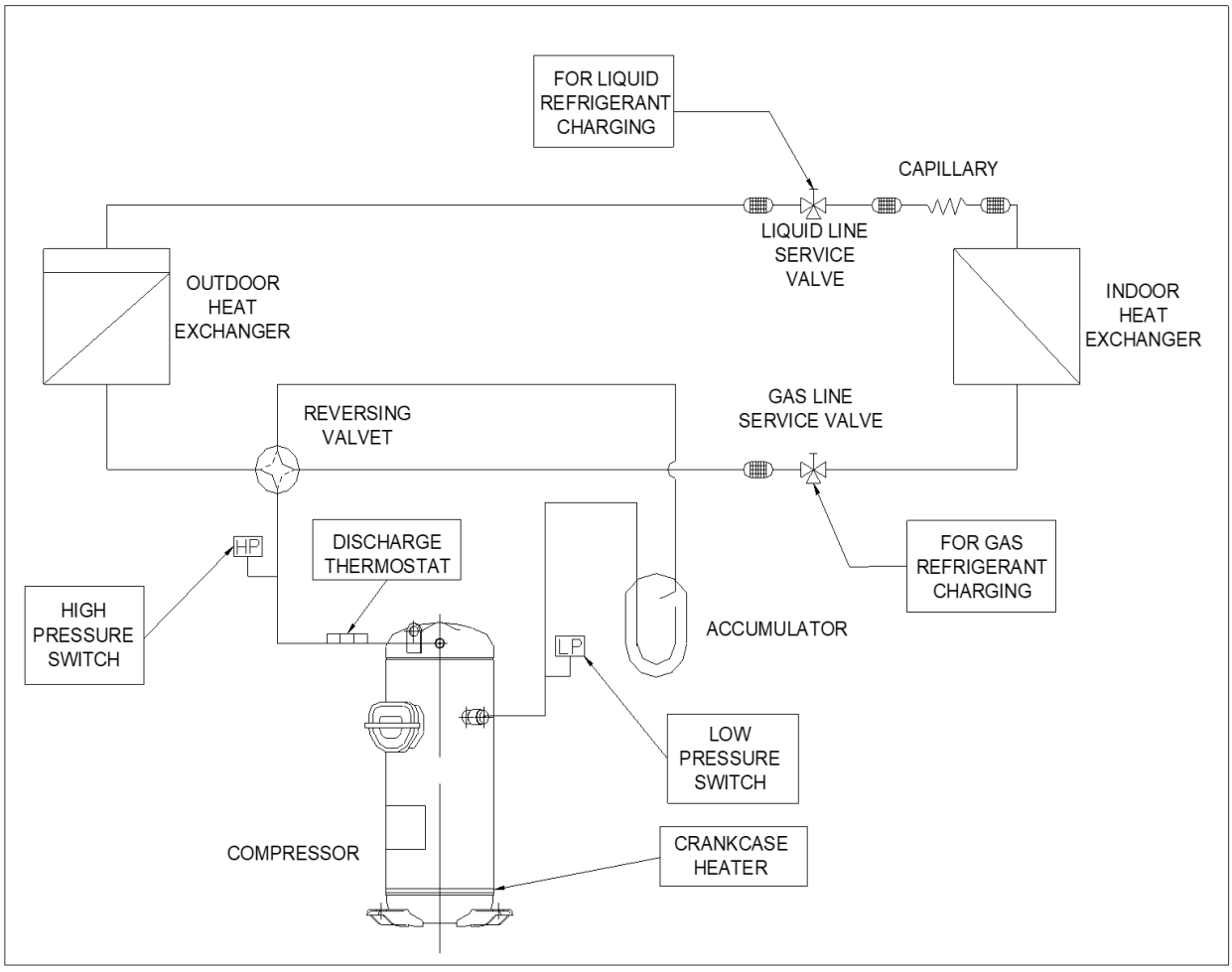

Section 5. Operating Envelope

Suction Gas Superhea : 9K.
Refrigerant : R407C.

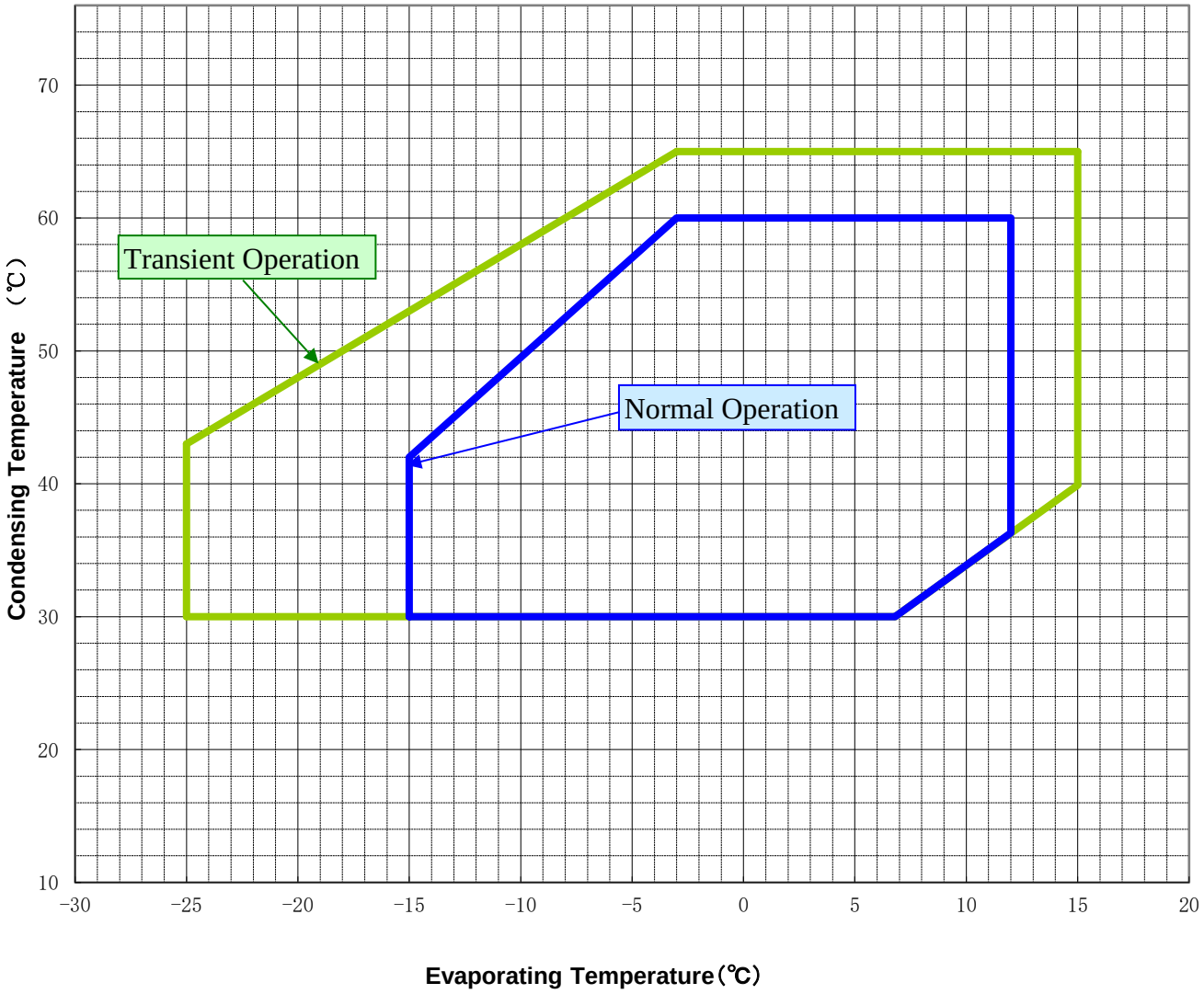

Section 6. Application Standard & Limit

The following requirements apply to vertical type hermetic scroll compressors:

Standard: Applicable to ordinary conditions in Japan JIS B8616 or equivalent conditions, such as standard rating conditions, maximum operating conditions, low temperature conditions, etc.

Limit: Applicable to transitional brief period of time, such as start-up and beginning of defrost mode.

No.	Item	Standard	Limit	Remark
1	Refrigerant	R407C(Refrigerant must meet a criterion)		
2	Average Evap. Temp.	-15~12°C 0.20~0.65MPa(G)	-25~15°C 0.07~0.73MPa(G)	Average temp. of evaperator Inlet and outlet.
3	Average Cond.Temp.	30~60°C 1.17~2.56MPa(G)	65°C 2.88MPa(G)	Average temp. of condensor Inlet and outlet.
4	Compression Ratio	2 ~ 6	10	
5	Winding Temp.	115°C	125°C	
6	Shell Bottom Temp.	Upper Limit:90°C Max.		When compressor is running
		Lower Limit: Evaporating Temp.12K Min.		
		Lower Limit:Ambient Temp.11K Min.		When compressor shuts off
7	Discharge Gas Temp.	115°C Max.	C-SB:130°C Max.	Temp. within 10cm of the discharge fitting.
			C-SC:135°C Max.	Temp. inside of the copper pipe on the top of compressor
8	Suction Gas Temp.	Superheat: 5K Min.	No excessive noise.	It should meet the requirement of item 5, 6, 7 and 13 within 30cm of the suction fitting.
9	Running Voltage	Within ±10% of the rated voltage		Voltage at compressor terminals.
10	Starting Voltage	Three Phase Models: 85% of the rated voltage min.		Dropped voltage at compressor terminals.
		Single Phase Models: 90% of the rated voltage min.		
11	On/Off Cycling	On Period: Until the oil level returns to the center of the lower bearing Off Period: Until balance of high and low pressure is obtained		For at least 7 minutes - on/3 minutes-off is recommended. 200,000 cycle Max.
12	Refrigerant Charge	Oil/Refrigerant(wt.)⩾0.35.		Specific gravity of the Oil:0.94.
13	Minimum Oil Level	C-SB:Center of the lower bearing	C-SB:Bottom of the lower bearing	
		C-SC:No less than 70% of the initial oil charge		
14	Abnormal Pressure Rise/Drop	Pressure Rise: 3.20MPa(G) Max.		By high pressure switch
		Pressure Drop: 0.05MPa(G) Min.		By low pressure switch
15	System Moisture Level	200ppm Max.		
16	System Uncondensable Gas Level	1 Vol.% Max. Residual Oxygen 0.1 Vol.% Max.		24 hrs. after vacuuming: 1.01kPa Max.
17	Tilt	5Deg.Max.		

Operation beyond the above limits must be approved by Sonyo Compressor (Dalian) Co., Ltd.

(G): Gauge Pressure

Notes

1 Installation should be completed within 15 minutes after removing the rubber plugs.

2 Do not use the compressor to compress air.

3 Do not energize the compressor under vacuumed conditon.

4 Evacuation and Refrigerant charge： Evacuate internal section in the refrigeration system from high and low pressure sides and charge liquid refrigerant from condenser outlet side. Additional charge shall be done with gas condition from low side.

5 Do not tilt over the compressor while carrying it.

6 Do not remove the paint.

7 Crankcase heater is required when the oil sump temperature is too low to meet the requirement of item 6 on page7.

8 Voltage fluctuation between compressor terminals, during operation, shall be within 2% of the rated voltage.

9 Do not operate compressor in reverse rotational direction.

10 Suction strainers are recommended for all applications.

11 Copper Piping Stress	Start/Shutdown	34.32 N/mm^2 Max.
	Run	12.26 N/mm^2 Max.

12 When The Compressor body and its packaging is abandoned,Please follow every sales environmental standards, For packaging refrigerant oil ,solid recycle and dispose.

13 Sonyo Compressor (Dalian) Co,Ltd provide the 《Compressor Specification Common Appendix》 and 《Safty Request on the use of Compressor》also fit this specification.

14.Limitation of Liability：

1)Our responsibility for this compressor shall be limited to the following range.

①The damage caused by a fault or defect of this compressor.

2)Warranty period:

①Generally speaking, within 18 months after the compressor is delivered to the customer.

The specific warranty time shall be agreed with our business department.

3)Response in case of defect found：

①During the warranty period, our company will investigate and judge the cause and responsibility of compressor damage, and notify the customer of the investigation results.

②After investigation, if it is confirmed that the compressor produced by our company is damaged and the customer's product is defective, our company will bear the responsibility for the upper limit of the compressor cost.

4)Our company will not provide quality guarantee for the compressor under the following circumstances：

①Damage caused by improper use when exceeding our compressor use specifications and compressor use safety requirements or other use standards formulated by the state.

②Compressor damage caused by defects in customer product design or manufacturing.

③Compressor damage caused by improper transportation, storage, handling, operation of customers or end users.

④Compressor damage caused by inevitable accidents, such as natural disasters: earthquake, fire, flood, collapse,etc.

5)Others：

①If the customer complains about the defects of our compressor in the end user or market, our company will cooperate with the investigation.

②Our company will not bear any responsibility for any loss caused by customers' failure to use according to technical requirements.

Section 7. Selection of Electrical Wire

Voltage drop may occur due to the large current draw during compressor starting.

We recommend selecting the wire size from the table below.

7.1 Type of Unit

7.1.1 Window & Commercial Type Unit

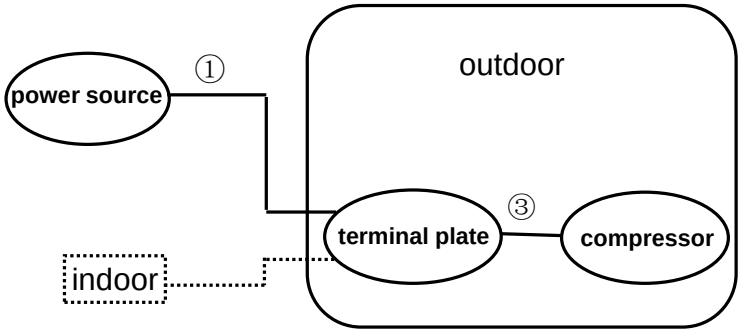

7.1.2 Split Type(Separate Type)

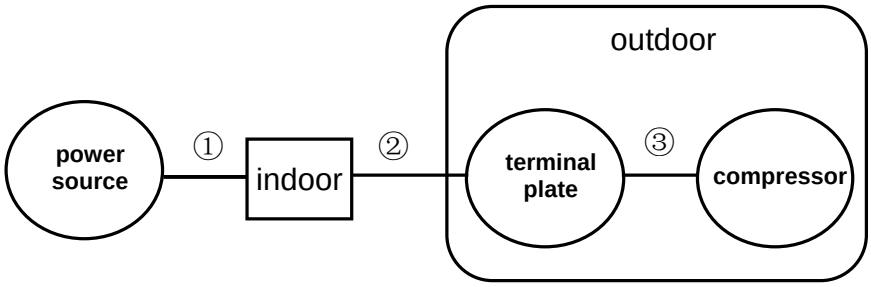

7.2 Size Table of Electrical Wire

Starting current (A)	Size of electrical wire (mm^2)						
	Remark ① or Remark ①+② (heat-resistance Temperature: 60°C min.)						Remark③ (heat-resistance Temperature: 120°Cmin.)
	5m max.	10m max.	15m max.	20m max.	30m max.	50m max.	1m max.
20max.	2.0	2.0	2.0	3.5	5.5	8.0	2.0
30max.	↑	↑	3.5	5.5	↑	14.0	↑
40max.	↑	3.5	5.5	↑	8.0	↑	↑
50max.	↑	↑	↑	8.0	14.0	22.0	↑
60max.	↑	5.5	↑	↑	↑	↑	↑
70max.	3.5	↑	8.0	14.0	↑	↑	3.5
80max.	↑	↑	↑	↑	22.0	30.0	↑
90max.	↑	↑	14.0	↑	↑	↑	↑
100max.	↑	8.0	↑	↑	↑	38.0	↑
110max.	↑	↑	↑	↑	↑	↑	↑
120max.	5.5	↑	↑	22.0	30.0	↑	↑
140max.	↑	14.0	↑	↑	↑	50.0	5.5
160max.	↑	↑	22.0	↑	↑	↑	↑
180max.	↑	↑	↑	↑	38.0	60.0	8.0
200max.	8.0	↑	↑	30.0	↑	↑	↑
220max.	↑	↑	↑	↑	50.0	80.0	↑
240max.	↑	↑	↑	↑	↑	↑	8.0*

* 8.0 mm^2 wire can be used below 0.8m

7.3 Caution of Ground

The internal motor protector does not protect the compressor against all possible conditions.

Please be sure that the system utilizes the ground connection when installed in the field.

Earth leakage circuit breaker must be installed.

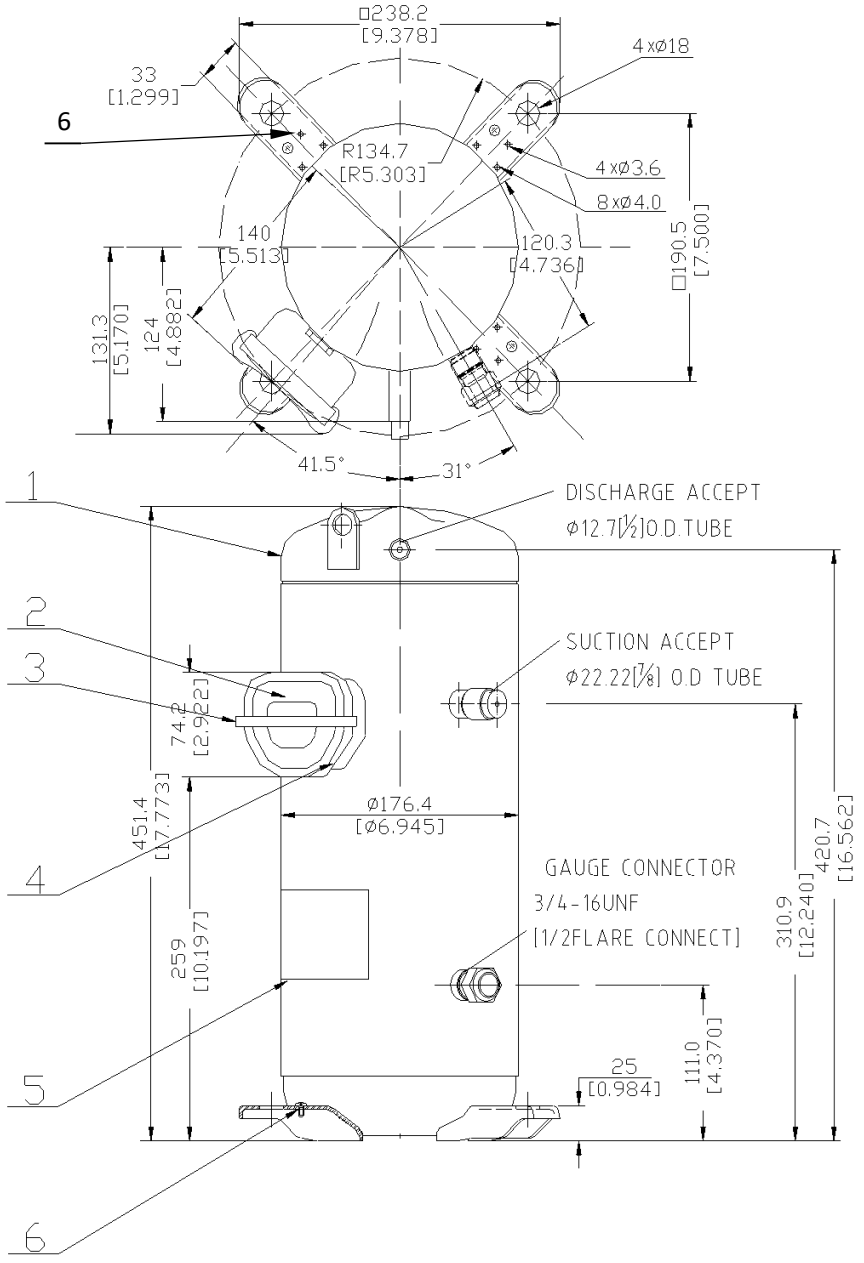

No.	Part Code	Qty	Name
1		1	Compressor
2	A-0101-DSB	1	Terminal Box Cover
3	A-0201-DSB	1	Terminal Box Clip
4	A-0301-DSB	1	Insulating Grommet
5		1	Nameplate
6	B-0101-DSB	2	Screw Special

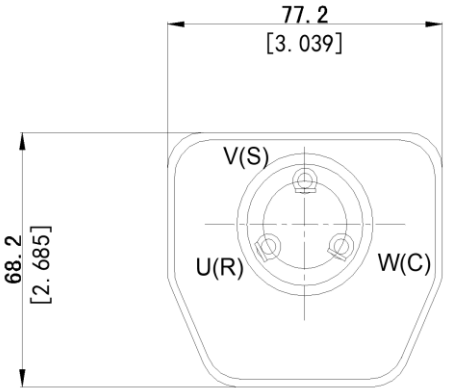

TERMINAL

Part Code

D-0105-DSB

Name

Compressor Outline Drawing

No.	Part	QTY	Name
1	**M-0101-DSB**	**4**	**Mounting Grommet**
2	**M-0201-DSB**	**4**	**Mounting Sleeve**

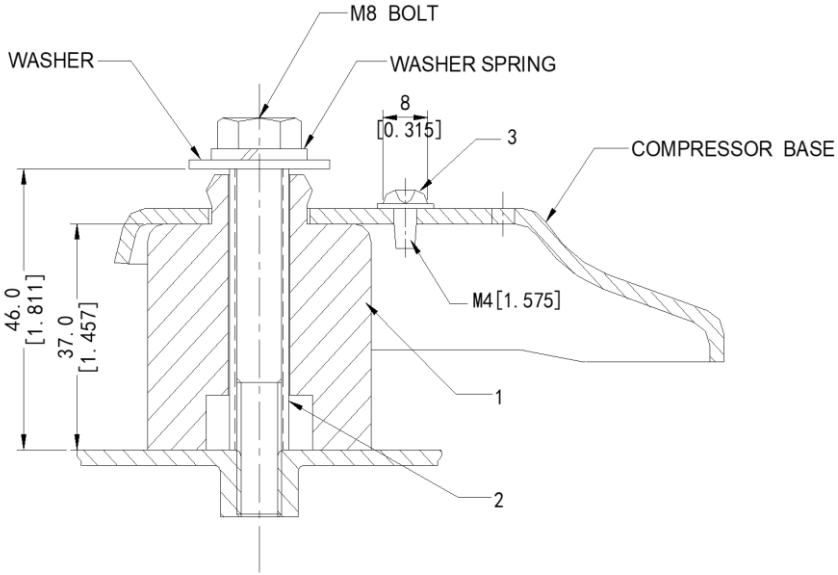

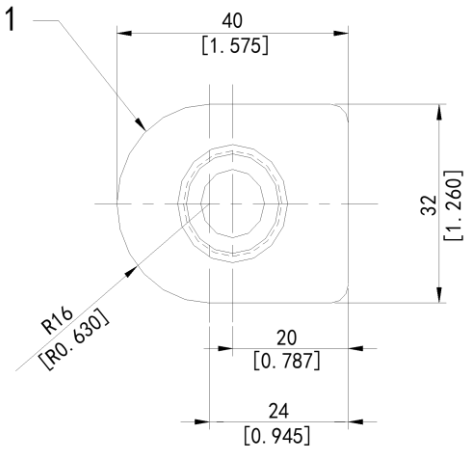

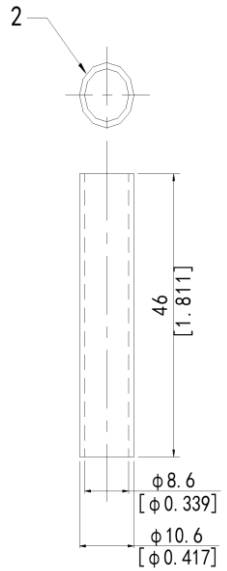

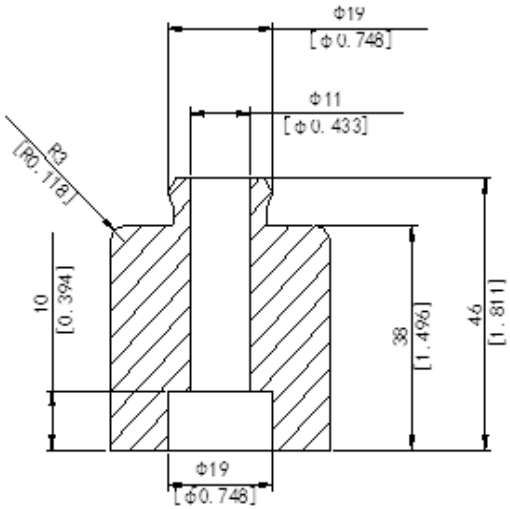

Part Code
M-5101-DSB
Name
Mounting Parts Listing

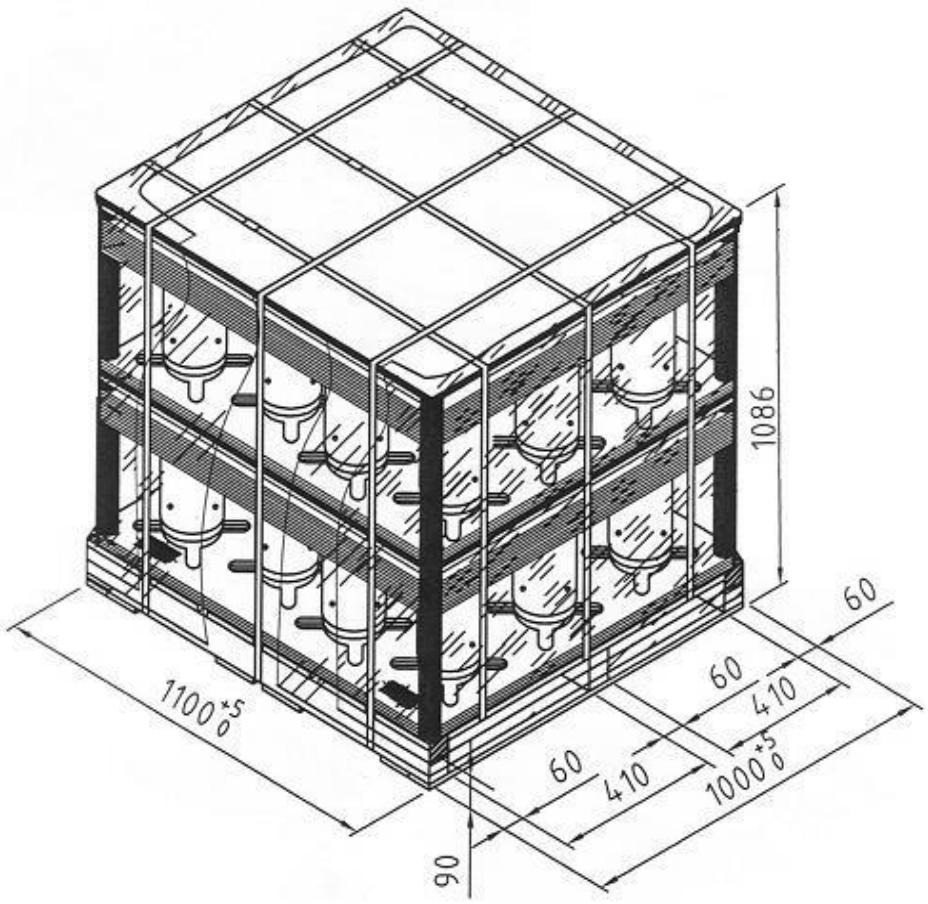

Part Code

D-0202-DSB

Name

Packing Dimensions

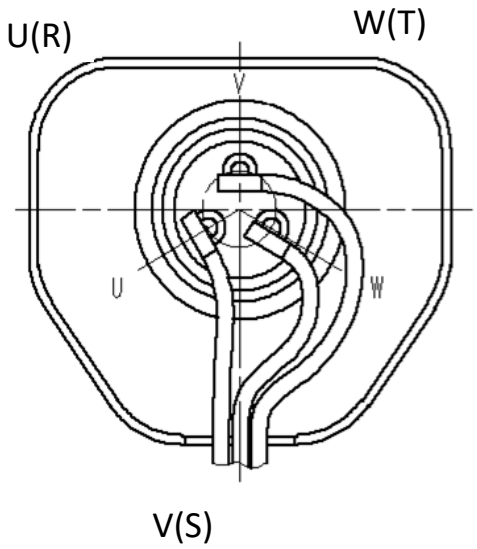

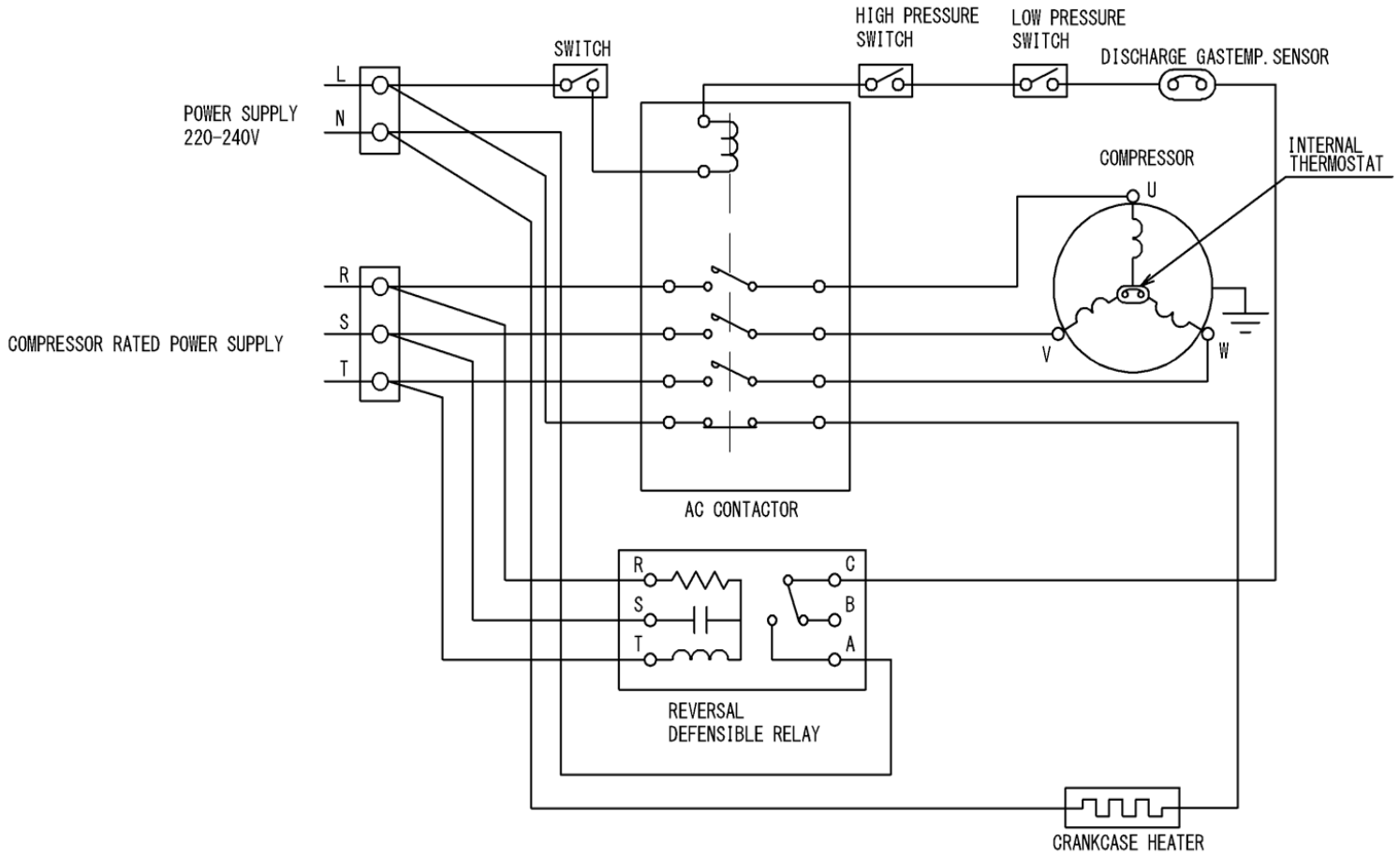

Part Code

E-0914-DSS

Name

Wiring Diagram

No.	AQYWS-001E
Sheet No.	9-1

Safety requirements regarding the usage of the Compressor

Ver. 2023.04

Sonyo Compressor (Dalian) Co.,Ltd.

2023.04.11
BSCDL

1. Application

This safety instruction applies to the following hermetic compressors (hereinafter, referred to as known as "compressor") , produced and sold by Sonyo Compressor (Dalian) Co.,Ltd.
(hereinafter, referred to as "our company")

Rotary type compressor
Scroll type compressor

2. Objective

The aim of this information is to ensure the safety of an end product which our compressor is intalled (hereinafter, referred to as product 'unit') from the compressor safety's view point. Our company will not take liability if the following safety instructions are not observed.

3. Terms and definitions

Terms which are not described in this document shall be referred to the JIS standard of Room Air-Conditioning (JIS C 9612-2013).

4. Basic safety design of compressors

(1) Compressor has a compression mechanism and motor in its hermetic pressure vessel.

(2) The hermetic pressure vessel is designed to be in compliance with the following safety regulations
- IEC60335-2-34
- UL60335-2-34
- GB 4706.17
- High Pressure Gas Safety Act (Refrigeration Safety Regulations)
- European Pressure Equipment Directive (2014/68/EU)
- Electrical Appliance and Material Safety Act (Technical Standards)

(3) The compressor displays a minimum handling warning. (See Attachment1)

(4) The main materials for the compressor and accessories are listed in Attachment2.

2023.04.11 BSCDL

5. Anticipated safety issues in the absence of this safety request

(1) Electric Shock

You may be electrocuted in the following cases:

・Contact with the live part (hermetic terminal)

If the terminal cover is properly installed, the live parts will not be directly exposed. However, access to the live hermetic terminal can cause an electric shock when detaching the terminal cover for an inspection or repairment.

・Electrical leakage due to motor burnout

Motor burnout might occur due to the following causes. The compressor itself will never ignite by itself, however a short circuit between a live part and non-live part can causeshock and electrical leakage.

＜Common examples of motor burnout＞

- Wrong power supply ・・・ when the compressor is supplied with power rating other than the specified power rating.
- Wrong wiring ・・・ when wiring other than the wiring specified in the circuit diagram is used.
- Non-specified parts ・・・ when using a parts other than the specified parts.
- Gas leakage operation ・・・ when operating the compressor with inadequate amount of refrigerant.
- In vacuum operation ・・・ when the compressor is operated while evacuation to quicken the evacuation of the refrigerant cycle.
- Air operation ・・・ when the compressor is operated while the refrigerant cycle is exposed to air.
- Abnormal parts ・・・ abnormality or defective OLP, capacitor, and etc.
- Others ・・・ lightning strike , instantaneous blackout, etc.

(2) Rupture and ignition

The hermetic pressure vessel will never leak or destruct as long as it is operated below the permissible limit (pressure, current, temperature, ambient condition and so on) specified in the compressor specification.
However, in the following cases, there is a risk of explosion or fire.

・Rupture due to air-compression operation

When the compressor is operated under the condition of mixing air in the refrigerant cycle, the refrigerant oil charged in the compressor is misted, which can trigger a rupture caused by ignition due to a high temperature and high pressure condition.

＜Cases which cause rupture＞

- Operating the compressor with the service-valve open and without connecting the refrigerant pipe.
- Operating the compressor without refrigerant.
- Removing the connection pipe during compressor operation.
  (The above three cases are air-compression operation)
- Charging refrigerant which is not specified.

・ Refrigerant spouting due to melting of glass in the glass terminal (terminal blowout)

When a large current flows through the hermetic terminal instantaneously, the insulation glass may melt and crack-open, and refrigerant gas and refrigerant oil may leak (spout) out of the compressor. Following are some examples of situation of causes:

<Cases which cause large current flow through the hermetic terminal>

- Short-circuit by adhesion of foreign object (sand, dust, moisture, etc.) to the insulation glass portion.
- Internal electricity discharges due to operation under vacuum.(Compressor operation during evacuation)
- Damage of motor caused by burning.

2023 04 11 BSCDL

・ Usage of unspecified refrigerant or unspecified refrigeration oil

When unspecified refrigerant or refrigeration oil is charged into the refrigeration system, it may causes mechanical defect, fault operation or breakdown which may become a serious risk to maintain safety.

・**Leakage due to corrosion of hermetic pressure vessel**

If used for a long time in an extremely severe corrosive environment, the hermetic pressure vessel may corrode and the internal refrigerant gas and refrigerating oil may leak (spout) to the outside.

(3) Burns, injuries

In the following cases, you may get burned or injured.

・**Burns due to contact with compressors**

Since the surface of the compressor during operation or immediately after stopping is hot, there is a risk of burns if you touch it directly with your bare hands.(Compressor surface temperature can reach 150°C.)

・**Injuries due to contact with compressors**

Holding the compressor with bare hands during installation and transportation work may cause injury.

・**Injuries caused by compressor drops**

Compressors are heavy objects. Please be careful about injuries during transportation.

6. Safety request items for the unit design

(1) Design the unit to make the compressor operate within the specified range (refrigerant,rated power supply, temperature, pressure etc.). For the attached parts, please use Panasonic's standard designated parts.

(2) Provide a ground to the unit and be sure to ground at installation. Furthermore, to secure safety, provide fuse(s), abnormal current protection circuit(s) etc. to the product, depending on the necessity.
In the case of portable or mobile dehumidifier or air-conditioner, consider a ground connection which is easy to connect, such as employing a plug with ground etc.

(3) The hermetic terminal portion must be designed in a way which is not easily exposed to electrically conductive objects, such as water, metal powder, sand,insects etc.
If foreign objects matter is suspected to enter, apply a gasket sheet to the bottom of the terminal cover and fill up the opening of the terminal cover with a sealing material.

(4) When usage under severe environment or condition (seaside, volcanic hot springs, chemical erosion gas area, dusty area etc.) is anticipated, it is necessary to take precautions by preparing an anti-corrosion structure or sealing of hermetic terminal surrounding etc.

(5) A wrongly connected 3-phase power supply wiring could become the cause of motor burn due to reverse rotation of the motor.
Install a reverse phase prevention mechanism (relay), etc. to prevent the compressor from operating in the event of incorrect wiring.

(6) Reverse rotation of motor may occur when a momentary power cut occur, and may cause motor burn. Design to prevent the compressor from reversing in the event of a momentary power failure.

(7) Regarding start and run capacitors, please use the protection level P2 or S2 capacitors of IEC60252-1. It is also important to pay attention to the installed location (cooling, water proof and dust-free), environment and surface temperature of the capacitors.
Capacitors may also cause ignition by aged deterioration. To prevent the spread of fire,the surrounding of capacitor shall be enclosed with metal or plastic rated UL 94V-0 or higher.

(8) The specifications (size, heat resistance of insulation cover material and etc.) of the lead wires and terminals to be connected to the compressor must be made from the ones that are able to withstand the respective maximum current and properly comply with the standard of the unit.

2023.04.11 BSCDL

(9) For units with built-in water tanks such as dehumidifiers or movable air-conditioners etc. which may fall or topple, design a protection towards electrical shock and electrical leakage due to water leakage from falling.

(10) The low-pressure pipe must not be located above the hermetic terminal of compressor because its surface will form dew condensation and water droplets will accumulated on the compressor surface.

(11) The unit design must be made to pass the tests (water spray test and etc.) with consideration to the environment in which the product is to be installed.
The structure must be designed to avoid continuous contact of water to compressor surface caused by absorption of sound proof material or condensation at suction pipe etc.

(12) When using the terminal cover for the lead pin of the glass terminal, use a heat-resistant material. However, never use vinyl chloride.
However, Do not use vinyl chloride. (Vinyl chloride will generate chlorine gas at high temperature which rusts the neighboring metal).

(13) If the insulation glass of the hermetic terminal melts and opens, the lead pin (metal) may spout In this case, the terminal cover may be damaged and pop out, so the unit near the terminal cover should be made of a strong outer shell.

In addition, in the case of products using flammable refrigerants, since the refrigerant may erupt and cause fire, it is recommended that the terminal cover and its peripheral members have appropriate strength and flame retardant properties, and that the design be difficult to propagate by flame.

(14) Compressor surface may heat-up to maximum 150°C. Surface of parts/materials which may contact the compressor surface should be designed with adequate heat-resistance.

(15) If the cycle is designed to continue up and doun of pressure in a short term for more than 1.0MPa inside the compressor during operation due to bypass operation or temporary stopping of fan, there is possibility that the strength of hermetic pressure vessle will decrease. Therefore, durability testing to secure the compressor relyability is necessary.

(16) Due to a harsh environment or component failure on the product side, abnormal pressure may be generated inside the refrigeration cycle, causing the compressor and piping to burst or damage, and the refrigerant may leak.

In addition, when the product is in operation (including when it is started and stopped), the stress applied to the piping should be designed with sufficient margin in consideration of the product life. If the piping stress is excessive, the piping may be damaged and refrigerant may leak.

(17) Design products that use flammable refrigerants in consideration of the following items.
- The amount of refrigerant charged should comply with the relevant public regulations according to the product, application, and destination.
- Take appropriate protective measures for "prevention of refrigerant leakage" and "prevention of ignition / explosion" on the unit of the product.
  If the protection is insufficient, the refrigerant may leak and cause a fire.

7. Safety requirements item during the unit production

(1) Do not operate the compressor in air suction or vacuum state.
Refrigerant tubes must be connected securely to prevent suction of air during operation.

When pump-down operation, confirm the stoppage of compressor before removing the refrigerant tubes. If the refrigerant tubes are disconnected without stopping the compressor, suction of air will cause abnormally high pressure in the refrigerant cycle and may cause injury due to burst of compressor housing.

Please state this clearly in the operation/installation manual of the unit to ensure proper operation/installation.

2023.04.11 BSCDL

(2) Do not allow water or foreign objects to remain in the terminal cover and keep the hermetic terminal clean.

(3) Handle the hermetic terminal with extra care and do not apply excessive force or shock (such as bending the pins or knocking it). Please do not straighten bent pins.
When brazing the discharge tube, protect the flame of torch not to rise the temperature of the terminal portion.
All above may cause chip or crack to terminal and subsequently cause refrigerant leakage or short-circuit of power supply.

(4) The terminal cover must be fixed properly and ensure that there is no pinching of lead wire by terminal cover edge and lifted OLP.

(5) Pay attention not to block the piping internal with brazing residue during brazing.

(6) When using air-blow to get rid of condensing water which occurred during unit running test or inspection test, make sure that there is no moisture remaining around the power supply parts. Moreover, if the unit is packed with plastic bags after the air-blow process, dew-drops may accumulate around the power supply portion. Consider to enclose desiccants to prevent moisture.

(7) Do not use refrigerant or refrigerant oil other than designated/specified.

(8) Please install electrical components and accessories correctly.
Failure to do so may result in a malfunction or fire.

8. Safety considerations during installation, inspection and repair

(1) Be sure to ground the unit.
When performing an inspection or a repair work, make sure the unit is grounded.

(2) Before starting any work on the unit, disconnect power supply.

(3) Properly fix the terminal cover before supplying electricity.
Do not to run compressor without terminal cover.

(4) Wear safety goggles when performing an inspection or repair on the compressor.

(5) Before disconnecting the compressor piping connection, make sure that no refrigerant gas remains in the refrigeration cycle.

If the pipe weld is removed with the refrigerant gas (pressure) remaining inside the compressor, the high-pressure refrigerant gas inside and the refrigerating machine oil will suddenly spurt out, which is dangerous. In addition, if the ejected refrigerant gas or refrigerating machine oil comes into contact with fire, toxic gas will be generated or a fire will occur.

(6) Do not operate the compressor in air suction or vacuum state.

- During installation, ensure the connection of all refrigerant tubes before operating the compressor.If the refrigerant tubes are not connected and the compressor is operated with the service valve open, air will be sucked-in and cause abnormally high pressure inside the refrigeration cycle.The compressor may burst and cause injuries.
- For pump-down operation, ensure the stoppage of compressor before removing the refrigerant tubes. If the refrigerant tubes are removed when the compressor is still in operation, air will be sucked-in and an cause abnormally high pressure inside the refrigeration cycle. The compressor may burst and cause injuries
- When relocating, do not mix air other than the designated refrigerant in the refrigeration cycle.If air is mixed in, the refrigeration cycle becomes abnormally high pressure, causing rupture, injury, etc. In order to clarify the specific work contents, please specify it in the procedure manual. For special work, please limit it to the work of the specialist.

(7) Use the designated/specified refrigerant or refrigeration oil and do not use others.

2023.04.11 BSCDL

(8) Do not touch the compressor during the operation or immediately after stoppage.
The surface temperature of compressor will become maximum 150°C .

(9) The safety instruction during inspection or repairs of the compressor shall be clearly instructed by the product procedures, manual etc. of the unit. The work must be made in accordance to the instructions.

(10) When replacing parts, use correct and original parts that is designated for the unit. Furthermore , the wiring of the compressor shall be performed in accordance to the wiring diagram.

(11) Be sure to connect a leakage breaker or fuse to the power supply side.

(12) Connect the wires following the connection diagram. A misconnection can damage the compressor.For 3-phase compressor, use a proof reverse rotation relay.

(13) If power supply is obtained from a generator, its frequency, waveform and voltage may not be as stable as commercial power supply. Therefore, ensure safety by performing a confirmation test.

(14) Do not apply excessive force or shock (bending the pins, impact, etc.) to the glass portion of terminal. Also, do not straighten a bended pin.
Chip-off or crack of terminal may cause refrigerant leakage or short circuit.

(15) Make sure that there is no adherence of water content, foreign object and etc. on the hermetic terminal and OLP. The terminal cover must be fixed properly. Lead wires shall not be stucked under the edge of terminal cover, and there shall not be any gaps between the OLP and upper shell.

(16) Do not touch the surface of low pressure side (such as accumulator) of the compressor with bare hands. The surface temperature may reach low temperature (-20℃ or below).

(17) Make sure not to crush the pipe of refrigeration cycle during maintenance, repair, or exchange of compressor, or not to block inside of piping with solder during brazing.

(18) For leak test, use refrigerant gas, inert gas or dry gas, and make sure that the pressure for leak test does not exceed the air tight pressure prescribed in the compressor specification.

(19) For products using flammable refrigerants, please observe the following matters.
- When installing, maintaining, relocating, or disposing of the main unit, provide proper ventilation and do so in a fire-free environment.
  In addition, please specify the above contents in the service manual, procedure manual, caution / warning label, etc.
  Insufficient ventilation and fire may cause a fire.
- When disposing of the product, discharge the refrigerant inside the product in advance. If the refrigerant remains, it may ignite due to the impact at the time of disposal.

9. Safety requirements during storage and transportation

(1) Instruction marks for handling the packings are printed on the external surface of the compressor packing material. Observe the instruction while handling the packing.

(2) Transfer the collective packings prperly by using cargo-handling machinery such as a forklifts, and pay attention to avoid injury due to fall, drop, etc.

(3) When stacking the packings for storage, observe the maximum stacking numbers marked on the packing to avoid injury due to fall, drop, etc.

(4) Avoid storing packing using corrugated carton in a high humidity place, which will cause fall or collapse of the packing.
Regadless of the packing materials, do not store the packing outdoor.

2023. 04. 11
BSCDL

(5) Compressors are heavy. Pay attention to avoid injury during unpacking or transportation.

(6) The packing materials consist of corrugated cardboards, strofoams (depending on the factory), PP band, wood etc. Storage the packing materials in a location without any ignition sources and equipted for fire prevention.

10. Caution to end users and service personnel

(1) Make sure end useres or repair personnels to observe the safety requirements of this dosuments using the inspection procedure, servicer manual, caution and warning labels and so on.

11. Other

If you have any questions about this safety request form, please contact us at the following address.

Inquiry office:

China:

Marketing Department,
Sonyo Compressor (Dalian) Co.,Ltd.
(BSCDL)
DongHai Road, GanJingZi District, DaLian City,
LiaoNing Province, China
TEL: 86-0411-62658178 FAX: 86-0411-62658288



Attachment1. Safety indication (warning label) on the compressor

- The minimum handling warning or danger are indicated on the label of the compressor. Do not damage or remove the indication labels.
- Make sure the compressor inspectors or repair personnels observe the warning. (Refer to the followings) When the warning is illegible due to the structure of the unit, make sure the compressor inspectors or repair personnels observe the warning from the product installation procedure, service manual, etc.

<Example of compressor warning label>

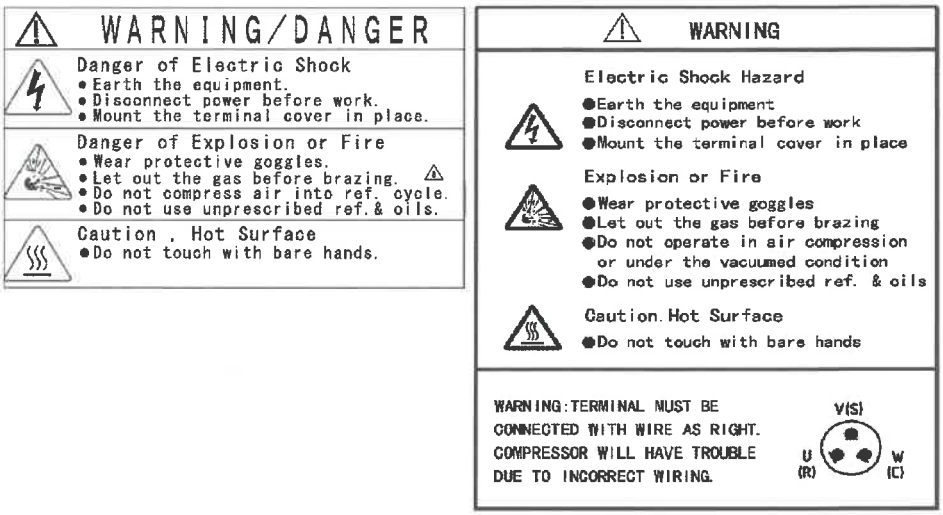

- In the case of compressors that use flammable refrigerants, a fire warning mark is displayed on the label of the compressor. (See figure below)
  Flammable refrigerants may ignite, so please follow the safety instructions in the safety request form.

<Example of fire warning mark>



Attachment2. Main materials of the compressor

Parts name	Material	Remarks
Hermetic vessel	Iron (painted)	Auto ignition tempt of paint: about 700℃
Hermetic terminal	Iron (plating), glass	
Overload protector enclosure	Bakelite	UL 94V-1, Auto ignition tempt.: 440℃
Terminal cover	PET	UL 94-5VA
	PPE+PS	UL 94-5VA
Gasket for terminal cover	Rubber	Auto ignition tempt.: 350℃
Grommet for mounting	Rubber	Auto ignition tempt.: 350℃
Refrigerant oil (in the compressor)	Suniso or Atomos	Flash point : 170℃ and more
	POE or PVE	Flash point: 180℃ and more
	PAG	Flash point : 200℃ and more
	LAB	Flash point : 160℃ and more

2023.04.11
BSCDL

No.	TYFSS-001E
Sheet No.	9-1

Compressor Specification Common Appendix

Ver. 2023.04

Sonyo Compressor (Dalian) Co.,Ltd.

2023.04.11
BSCDL

1. Scope

This common appendix applies to the following hermetic compressors (hereinafter, referred to as known as "compressor") , produced and sold by Sonyo Compressor (Dalian) Co.,Ltd.
(hereinafter, referred to as "our company")

Rotary type compressor
Scroll type compressor

This common appendix applies to our company compressor for air conditioner, air-source heat pump water heater, humidifier, and dryer systems to secure the safety ,the reliability and durability of the end product and the compressor.
However as for special application such as automobile air-conditioners, each compressor specification will be arranged separately.
Regarding the detail specification, refer to each compressor specification. When there is a difference between this common appendix and the compressor specification, prioritize the individual compressor specification.

2. Common Specifications of Compressors

2.1 Air tight and Hydrostatic withstand pressure of housings

Air tight and Hydrostatic withstand pressure of housings comply with IEC60335-2-34,UL60335-2-34, Refrigeration Safety Rules, Refrigeration Safety regulations relationship illustrated reference, and EU Pressure Equipment Directive (2014/68/EU)

2.2 Insulation resistance (at a refrigerant stagnation)

Regarding the Insulation resistance between live parts and accessible parts when applied voltage of 500V DC, refer to each compressor specification for the requirements.

2.3 Clearances and creepage distances

Clearances and creepage distances shall comply with IEC 60335-1, IEC 60335-2-34, UL 60335-1,UL 60335-2-34, and PSE (The Electrical Appliance and Material Safety Law "Denanhou").

2.4 Dielectric withstand voltage test (opened to atmosphere)

When applying alternating voltage with a frequency of 50Hz or 60Hz between the live part and accessable metal parts, the compressor shall withstand continuously for 1 minute.
The applied voltage shall be 1,500V when the rated voltage is ≦ 250V or less, and twice the rated voltage +1,000V when the rated voltage is > 250V.
However, for mass production inspection, 1,800V may be applied for 1 second instead.

2.5 Residual moisture

Residual moisture is measured according to our company in-house standard.
Refer to each compressor specification for the requirements.

2.6 Residual contamination

Residual contamination is measured according to our company in-house standard.
Refer to each compressor specification for the requirements.

2.7 Appearance

The entire surface of the compressor is coated with black paint and shall be free from cracks, dents,peeling, rust and so on.

2.8 Marking

Model name and production date are marked on the surface of the compressor.
When refrigerant oil and dried N2 gas is charged, the designated mark is stamped.



3. Restrictions

3.1 Compliance with compressor specification

Operate the compressor within the operating range described in the common appendix and compressor specification. Make sure to place a fuse or a breaker, when the compressor is installed to the end product. Circuit breakers will be necessary according to the installed location.

3.2 Supply voltage

The voltage applied to hermetic terminals shall be within the range described in the compressor specification. In the case of an inverter compressor, the compressor shall be connected to an inverter driver specifically designed for the compressor.
Do not supply AC voltage (single phase 100V, 200V, 220V, three-phase 200V etc.) directly to the terminal of the inverter compressor. If an AC voltage is directly connected to the inverter compressor using a DC brushless motor, the DC motor inside the compressor will be demagnetized.
In the case of a fixed speed three-phase compressor, it is recommended that the imbalance ratio of the power supply voltage be within 2% to prevent performance deterioration and burnout due to local heating of the motor.

3.3 Suction temperature

The suction temperature shall be higher than evaporator outlet temperature. (If there is a specific description in the compressor specification regarding to superheat, follow the contents.)

3.4 Discharge temperature

The Discharge temperature shall be lower than the limitation in the compressor specification.
When there is no description regarding the discharge temperature measuring point, it shall be at the discharging tube located at 100mm ~ 150mm from the compressor surface. However, for models with a temperature sensor attached in the discharge tube, the discharge temperature is the detected temperature of the sensor.

3.5 Motor coil temperature

The motor coil temperature shall be lower than the limitation of the compressor specification.

3.6 Operating pressure and compression ratio

The suction pressure and discharge pressure shall be within the range described in the compressor specification. However, when operating pressures exceed the range described in the specification during transitional period such as during start up and defrosting, it may be judged by testing or checking the operating data.

3.7 Starting and maximum current of the compressor

The starting current and maximum current shall be within the range described in the compressor specification. In the case of inverter compressor using a DC brushless motor, over current will cause demagnetization of the DC brushless motor or motor burnout.

3.8. Starting voltage of compressor (exclude inverter compressor)

The starting voltage mentioned in the compressor specification is the voltage applied to the compressor terminal, and is described as V1 in the following figure.

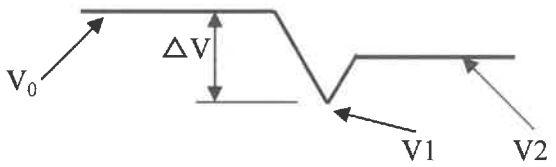

V_0: Terminal voltage before operation
V1: Terminal voltage at starting
V2: Terminal voltage after stable operation
ΔV: Voltage drop at starting

With regards to the voltage drop at starting, it is necessary to consider the size/type of lead wire to be connected to the terminal of the hermetic terminals.

3.9 Liquid refrigerant flood back

Liquid refrigerant flood back can cause great influence to the reliability of compressor.
When liquid compression, knocking noise, current surge, or undesirable vibration etc. occurs, implement the following countermeasures to prevent liquid refrigerant flood back.
Liquid compression can lead to serious damages to mechanical parts.

1) Add another accumulator
2) Decrease refrigerant charge amount
3) Change the operation mode
4) Install an additional internal heat exchanger

Observe with the compressor with sight glasses supplied by Panasonic, and submit the results.

2023.04.11
BSCDL

3. 10. Oil level of the compressor

The minimum oil level in the compressor shall comply with the requirements of the compressor specification to ensure the compressor reliability.

When the oil is foamed, do not consider the foaming portion as oil level.

Low oil level will cause lack of lubrication to rotating parts and seriously affect the compressor reliability.

Observe the oil level with the compressor with sight glass supplied by Panasonic, and submit the result.

<<Example of requirements of oil level>>

Rotary type compressor

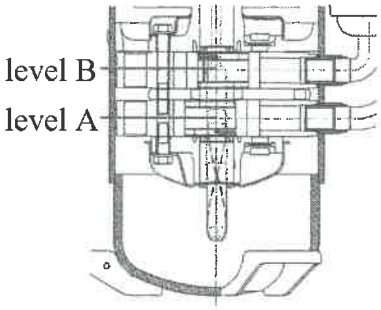

· level A : Lowest oil level during transition operation
· level B : Lowest oil level during stable operation

Scroll type compressor

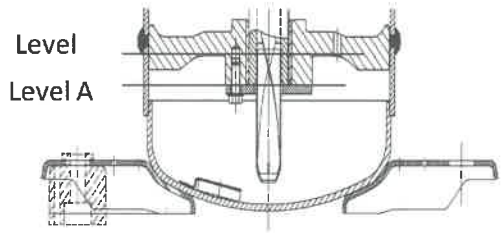

· level A : Lowest oil level during transition operation
· level B : Lowest oil level during stable operation

<B、E series>

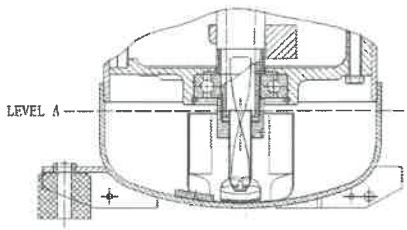

· level A : Lowest oil level during transition operation and stable operation

<C series>

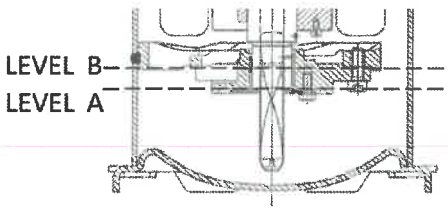

· level A : Lowest oil level during transition operation
· level B : Lowest oil level during stable operation

<G series>

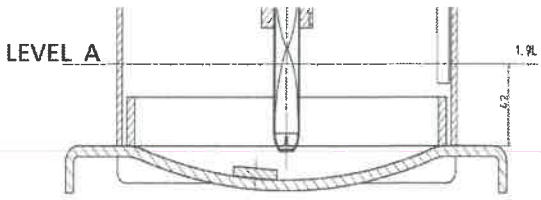

· level A : Lowest oil level during transition operation and stable operation

<F series>

[Cautions on using compressor with sight glass]

1. The sight glass is made by tempered glass. However, just n case, do not look directly through the sight glass. On observation of oil from sight glass, observation through acrylic plate etc. or using a video camera is recommended.
2. Do not give any impact to sight glass.
3. Do not heat the sight glass with flame of burner, when applying the compressor to unit.
4. If sight glass get a crack or breaks etc., stop operation immediately.

2023 04 11
BSCDL

3.11 Surface stress of pipe

Suppress surface stress (half amplitude) of copper pipes connecting the compressor and refrigeration cycle shall be less than the values described in the compressor specification.

3.12 Allowable inclined angle

Suppress the allowable inclined angle so as to be less than the values described in the compressor specification. However, deviations of the allowable angle may be approved after confirmation of the operation in some cases.

3.13 Change rate of compressor operation speed

The rate of operation speed change of the inverter compressor can affect the comperssor reliability.(the rate shall be determined after confirmation of compressor oil level, liquid back, and reliability test results.)
If there is a specific description in the compressor specification, follow the contents.

3.14 Starting of the compressor

In the case of inverter compressor, operation at rather low frequency after starting is necessary to avoid insufficient

Confirmation of oil level is also necessary when re-starting after defrost etc. Compressors with sight glasses are available to provide from Panasonic.
If there is a specific description in the compressor specification, follow the contents.

3.15 Defrost operation

Inverter compressors shall operate at low frequency just before the start and end of defrost operation to maintain the oil level inside the compressor.
Observe the oil level using compressor with sight glass supplied by Panasonic and inform the results.

3.16 Cautions on transfer to low frequency operation (Scroll type compressor)

For inverter compressors, to prevent plunge of refrigeration capacity due to separation of stationary and orbit scroll, pay attention to sharp drop of pressure difference and liquid back, when transferring to low frequency operation which is no more than 1500 min^{-1}.

3.17 Low frequency operation (Scroll type compressor)

When operating the scroll compressor under 1500 min^{-1} more than 30 minutes, operate the scroll compressor at more than 1500 min^{-1} for more than 5 seconds to secure appropriate lubrication.

3.18 Operation Interval

The maximum number of operation interruptions shall be 6 times per hour.
Operate the compressor continuously at least for 5 minutes after restarting, or operate the compressor until the oil level is back to normal.
The shut-down period shall not be less than 3 minutes, or restart the compressor after balancing the pressure of the discharge and the suction.

3.19 Direction of rotation

Connect wires following the wiring diagram described in the compressor specification.
Misconnection cause reverse rotation or starting failure, which will damage the compressor.
Check the wiring diagram to avoid misconnection.
For the three phase induction compressor, use a negative phase protection relay.

2023. 04. 11
BSCDL

3.20 Dustproof for hermetic terminal

Cover the hermetic terminal with the terminal cover to prevent or reduce dust intrusion. Follow the designated mounting method of the terminal cover.

3.21 Strainer

Place a strainer with a fine mesh screen in the suction pipe and an oil supply pipe to prevent intrusion of foreign particles to the compressor. The strainer should have a diameter greater than or equal to 30mm and the screen should have a mesh greater than or equal to #100.
This shall not apply if an accumulator which includes a screen with the specification described above is used.

3.22 Dryer

When setting a dryer to the refrigeration cycle with a compressor containing POE oil (such as RB68A), use a proper dryer compatible with the used refrigerant.

4. Restriction in manufacturing processes

4.1 Contamination control in a refrigeration cycle

The contamination shall be controlled in the refrigeration cycle and avoid invasions of dust or contamination residues.

4.2 Refrigerant Charging

Do not charge liquid refrigerant directly into the compressor, when charging refrigerant to the refrigeration cycle. Confirm Nitrogen flow from the compressor, when opening the seal of the compressor. Finish installation to the unit within 15 minutes after opening the seal of the compressor.

4.3 Operation for compressor lubrication

For proper lubrication of the compressor, operate the compressor for more than 20 seconds within 15 minutes after charging the refrigerant to the refrigeration cycle.

4.4 Process Inspection

Even during inspection process, operate the compressor within the specified operation range.

4.5 Process Inspection for inverter compressors

When the inverter compressor is operated at high speed during inspection process, operate the compressor at low speed to collect oil into the compressor before shut down.

4.6 Parts

Do not use parts used for refrigerants that are not specified in the compressor specification.

4.7 Use of chlorinated solvents

Chlorinated solvents shall not be used to clean pipes or parts.
When chlorinated solvents are used, remove residues of chlorinated solvents.

4.8 Use of polymeric materials

The compatibility of polymeric materials such as plastic used in the refrigeration cycle shall be evaluated towards refrigerant and refrigerant oil.

4.9 lubricant oil for process

Check the compatibility of process oil such as lubrication oil for heat exchanging and choose oil which do not effect the system.

4.10 Brazing flux

Flux-free brazing is recommended for brazing copper pipes. When material is copper and steel which brazing flux is necessary, select a brazing flux which does not affect the refrigerant oil and eliminate residual brazing flux as much as possible.

4.11 Brazing process

It is important to flow nitrogen through the system while brazing all joints during the system assembly process. Nitrogen displaces the air and prevents the formation of copper oxides in the system.

4.12 Leakage test

Charge the designated refrigerant and use a leakage detector exclusive to refrigerants to check the leakage. Do not use chloride refrigerants.

2023 04 11
BSCDL

5. Miscellaneous requirements

5.1 Operation with air

Do not run the compressor with air.

Do not disconnect pipes during installation and pump-down.

When disconnecting pipes with the discharge side valve closed and the suction side valve opened during operation of compressor, both pressure and temperature inside the compressor would increase and may cause explosion and injuries.

When operating the compressor with air for product inspection etc., please contact us.

5.2 Operation in a vacuum

Do not operate the compressor in a vacuum state, such as operating during air purge with a vacuum pump. It may cause dangerous arc discharge and dielectric breakdown.

5.3 Electric pulse

Do not supply electric pulse to the hermetic terminals when the compressor is in a vacuum state.

5.4 Pump-down operation

Pump-down operation shall finish within 10 minutes at maximum rotation speed, 3600min^{-1}.

5.5 Vibration

Do not rock the compressor during operation.

5.6 Temperature limit

To prevent oil degradation, do not set the temperature inside the refrigeration cycle to -35 ° C or less for high / medium temperature models, and -50 ° C or less for low temperature models.

If there is a specific description in the compressor specification, follow the contents.

5.7 Operation at a low ambient temperature

If liquid refrigerant accumulates inside the compressor due to use (including stoppage) at low ambient temperature or use with large amount of refrigerant, decrease in the refrigeration oil dilution ratio or decrease in the oil level at startup may cause poor lubrication or liquid compression.

A crankcase heater which can increase the bottom temperature of the compressor 11K higher than the ambient temperature, which also can reduce the oil level to the designated line within 5 hours after turning on the electricity is recommended.

5.8 Atmosphere

Do not use the compressor in a corrosive atmosphere, such as a chemical storage area.

5.9 Gas leakage

When refrigerant leak occurs in the refrigeration system, take measures to stop the operation of the compressor in order to protect the compressor against abnormal temperature rise due to refrigerant leak and to prevent the outflow of refrigerant oil.

5.10 Mixture of refrigerant oils

Use the designated refrigerant and control the purity of refrigerant. (Refer to Attachment 1 regarding refrigerant purity.)

Use the designated refrigerant oil at specified amount. (Less amount of refrigerant oil may affect the reliability of the compressor and more amount of refrigerant may cause performance degradation.)

Even in the market, take measures to prevent the use of refrigerants and refrigerant oils other than those specified, and take measures to prevent mixture of different types. If additional refrigeration oil is necessary, confirm the compressor specification, and add refrigeration oil with controlled water content.

5.11 Electrical safety - Lead wires connection to the compressor

Connect lead wires to the compressor without lead wire touching the surface of compressor.

2023. 04. 11
BSCDL

5.12 Electrical safety - Water

The unit shall pass tests assuming the environment where the end product is installed. (such as water spray test

Prevent the compressor from continuous contact of water caused by water absorption of sound proof material or condensing dew of suction pipes.

5.13 Compressor storage

Store the compressor in a clean place, avoiding high temperature and high humidity. Do not store the compressors outdoor. Storage under high temperature ambience may unplug the rubber seal cap, and storage under high humidity environment may weaken the strength of packaging material and cause collapse of packing cases.

5.14 Atmosphere release

The compressor shall not be exposed to the atmosphere without the seal plug for over 15 minutes.

5.15 Compressor handling

Handle the glass portion of hermetic terminal with care.
Do not apply impact or excessive force to the glass or the terminal pin of the glass terminal.
Do not bend the terminal pin.
It may cause chipping, cracking, and consequent refrigerant leakage and short circuit.

5.16 Impact damage

Do not drop or excessively tilt the compressor during transportation.
Do not use a dropped compressor.

5.17 Accessories

Use the designated accessories by our company.
Especially, for the start and run capacitor, use capacitors with protection level P2 or S2 of IEC60252-1. Pay attention to the location, the surface temperature of the capacitor, and the environment which the capacitor is used (such as cooling, water-proof, and dust-free).
The capacitor may cause fire due to aging degradation. Cover the capacitor with flame retardant metal material or plastic material classified as over UL 94 V-0.

5.18 Spacing between the rubber grommets and fasting nut.

Keep the spacing between the rubber grommet and fasting nut from 0.5 mm to 2.0 mm gap.
Refer to the accessory mounting drawing or compressor specification for details.

5.19 Insulation material for lead wires

The lead wire connected to the hermetic terminals shall not contain any substance that will emit corrosive gas (ex. Chlorine gas).

5.20 Inquiry

If there are any questions for the compressor usage, please contact us.

5.21 Exemption from obligation

Our company is not liable to any problems occurred, if the usage of the compressor is not complied with the compressor specification and this common appendix.



No.	TYFSS-001E
Sheet-No.	9-9

Attachment 1. Refrigerant Purity

<Single refrigerant>

Refrigerant	HCFC-22 HFC-134a HFC-32 HFO-1234yf	HFO-1234ze(E)	R290	R744(CO2)
Purity	99.5 wt% Min.	99.8 wt% Min.	99.5 wt% Min.	99.9 vol% Min.
Vapor Content	100 wtppm Max.	50 wtppm Max.	100 wtppm Max.	—
Acid Content (HCl Conversion)	1 wtppm Max.	1 wtppm Max.	1 wtppm Max.	—
Moisture Content	10 wtppm Max.	10 wtppm Max.	15 wtppm Max.	0.005 vol% Max.
Non-Condensable Gas	1.5 vol% Max.	1.5 vol% Max.	1.5 vol% Max.	—
Total sulfur	—	—	—	0.03 ppm Max.
Gas Impurities (H2, N2, O2, Ar)	—	—	—	0.01 vol% Max.

< Mixed refrigerant>

Refrigerant		HFC-410A	HFC-404A	HFC-448A	HFC-449A
Structure : Composition (wt%)					
	HFC32	50 ± 1.5		26 ± 2.0	24.3 ± 2.0
	HFC125	50 ± 1.5	44 ± 2.0	26 ± 2.0	24.7 ± 2.0
	HFC134a		4 ± 2.0	21 ± 2.0	25.7 ± 2.0
	HFC143a		52 ± 2.0		
	HFO1234yf			20 ± 2.0	25.3 ± 2.0
	HFO1234ze			7 ± 2.0	
Purity		Each composition at 99.5 wt% Min.			
Vapor Content		100 wtppm Max.			
Acid Content (HCl Conversion)		1 wtppm Max.			
Moisture Content		10 wtppm Max.			
Non-Condensable Gas		1.5 vol% Max.			

Refrigerant		HFC-454C	HFC-407C	HFC-407H	
Structure : Composition (wt%)					
	HFC32	21.5 ± 2.0	23 ± 2.0	32.5 ± 1.0	
	HFC125		25 ± 2.0	15 ± 1.0	
	HFC134a		52 ± 2.0	52.5 ± 2.0	
	HFC143a				
	HFO1234yf	78.5 ± 2.0			
	HFO1234ze				
Purity		Each composition at 99.5 wt% Min.		Each composition at 99.8 wt% Min.	
Vapor Content		100 wtppm Max.		15 wtppm Max.	
Acid Content (HCl Conversion)		1 wtppm Max.		1 wtppm Max.	
Moisture Content		10 wtppm Max.		10 wtppm Max.	
Non-Condensable Gas		1.5 vol% Max.		1.0 vol% Max.	

2023 04. 11
BSCDL