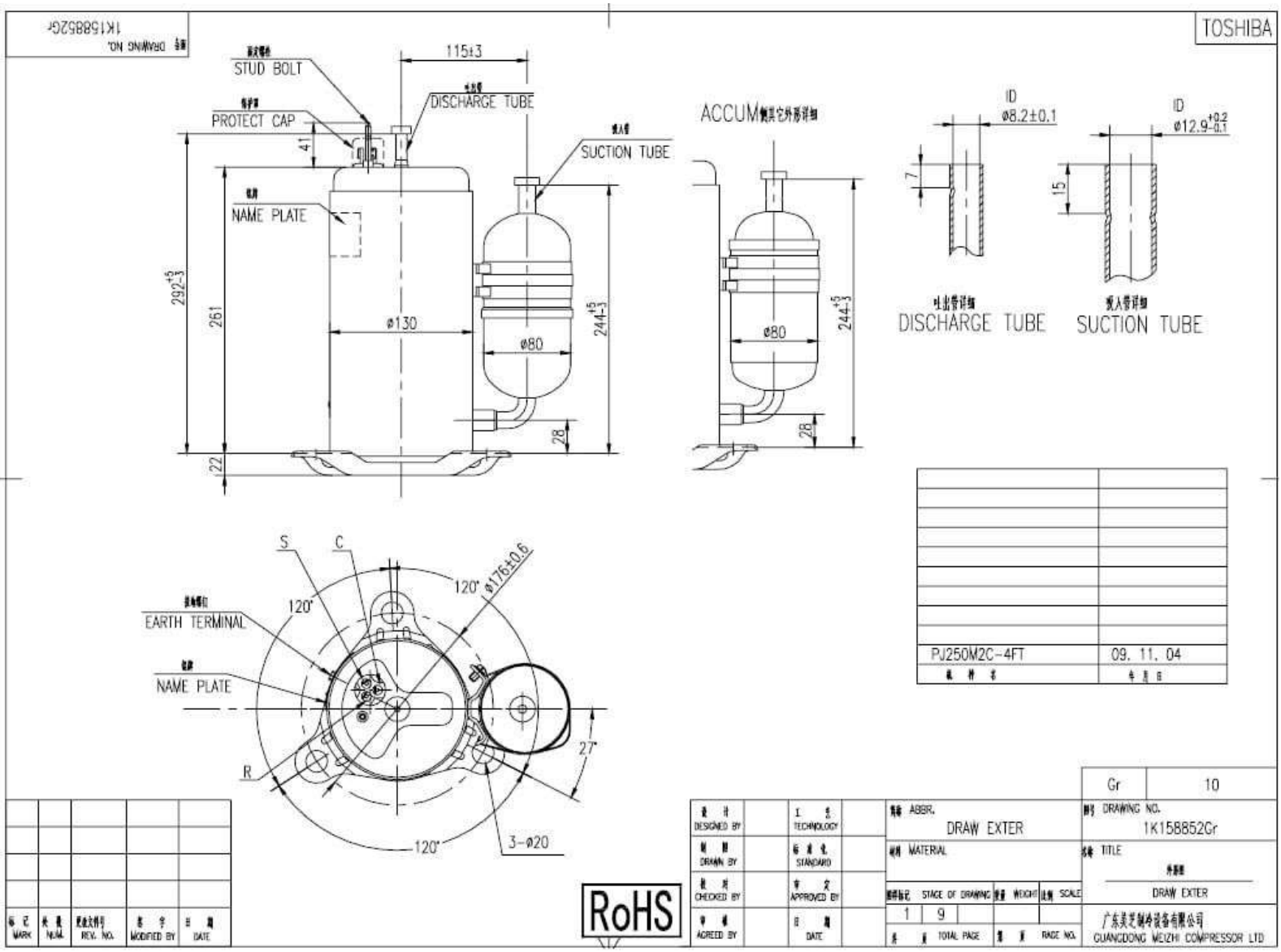

TOSHIBA
DRAWING NO. 1K158852Gr
STUD BOLT
PROTECT CAP
DISCHARGE TUBE
SUCTION TUBE
NAME PLATE
115±3
41
292+5-3
261
ø130
ø80
244+5-3
28
22
ACCUM
ø80
244+5-3
28
ID
ø8.2±0.1
7
ID
ø12.9+0.2-0.1
15
DISCHARGE TUBE
SUCTION TUBE
S
C
120°
120°
ø176±0.6
EARTH TERMINAL
NAME PLATE
R
27°
120°
3-ø20
PJ250M2C-4FT
09. 11. 04
Gr
10
DESIGNED BY
TECHNOLOGY
DRAWN BY
STANDARD
CHECKED BY
APPROVED BY
AGREED BY
DATE
ABBR.
DRAW EXTER
MATERIAL
STAGE OF DRAWING
WEIGHT
SCALE
1
9
TOTAL PAGE
PAGE NO.
DRAWING NO.
1K158852Gr
TITLE
DRAW EXTER
广东美芝制冷设备有限公司
GUANGDONG MEIZHI COMPRESSOR LTD
MARK
NUM.
REV. NO.
MODIFIED BY
DATE
RoHS